Greedy Algorithm: Prim's Algorithm

Design and Analysis of Algorithms

Dhannya SM

Dept of CSE
SSN College of Engineering

Problem Statement

- A *spanning tree* of an undirected, connected graph is its connected acyclic sub-graph (i.e., a tree) that contains all the vertices of the graph.
- Given a weighted, undirected graph G, a *minimum spanning tree* of G is its spanning tree of the smallest weight, where the weight of a tree is defined as the sum of the weights on all its edges.

Problem: The **minimum spanning tree problem** is the problem of finding a minimum spanning tree for a given weighted connected graph.

Example of spanning trees

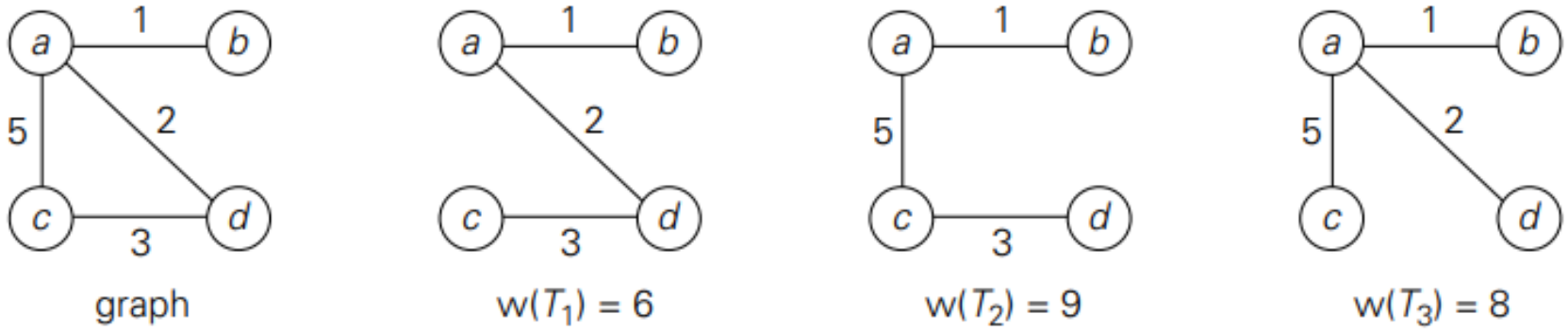

Graph and its spanning trees, with T_1 being the minimum spanning tree.

Properties of a minimum spanning tree

- Given a graph $G = (V, E)$, the vertex set of a minimum spanning tree T of G is the same as that of G.
- If the graph has n vertices, then the number of edges in T is $n - 1$.
- T has no cycles (by the very definition of a tree)
- T has the smallest weight among all possible spanning trees
- A given graph can have more than one **minimum** spanning tree, but each of them will have the same weight.
- For an unweighted graph, how do we find a minimum spanning tree?

Algorithm

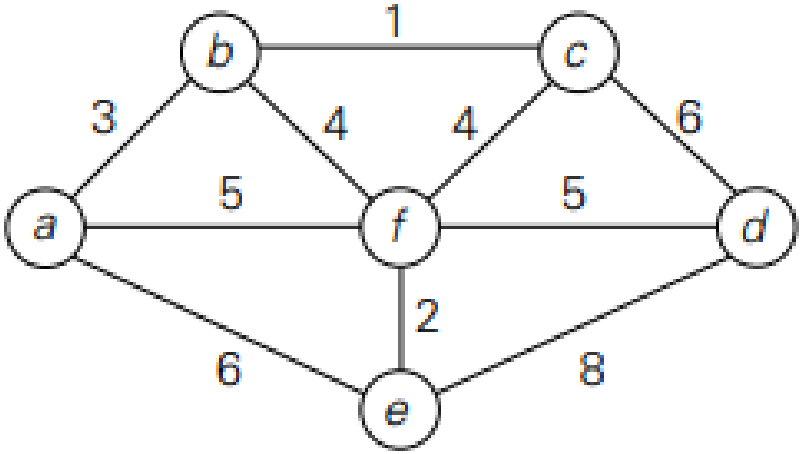

Algorithm execution

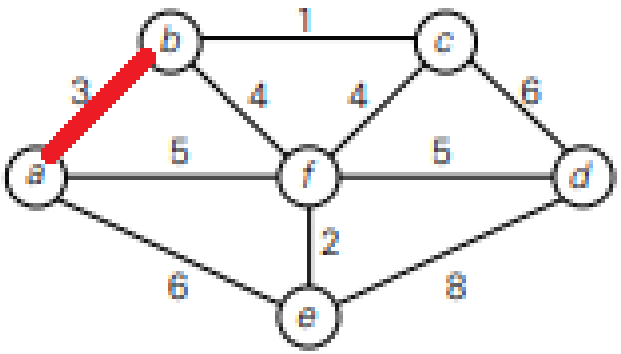

Algorithm execution

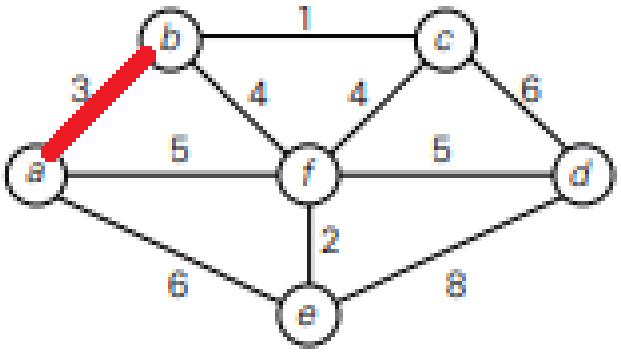

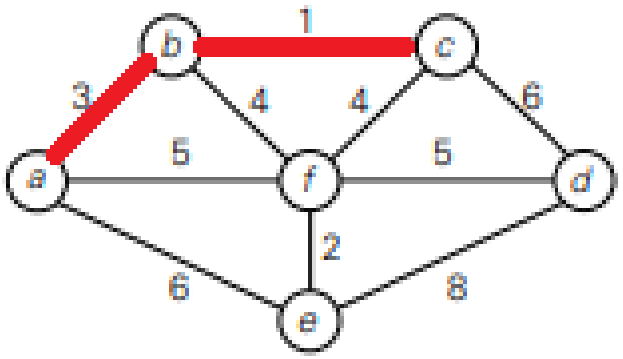

Algorithm execution

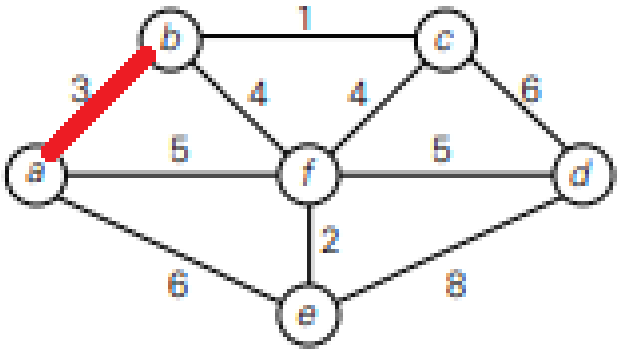

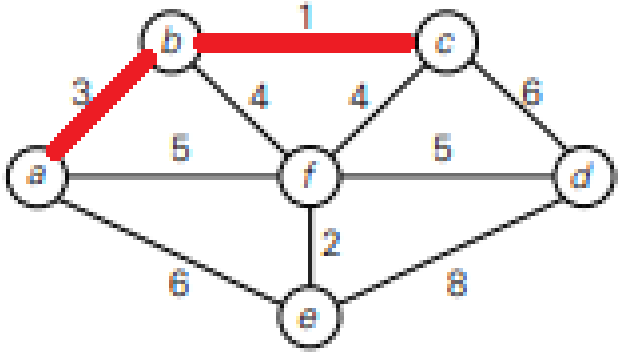

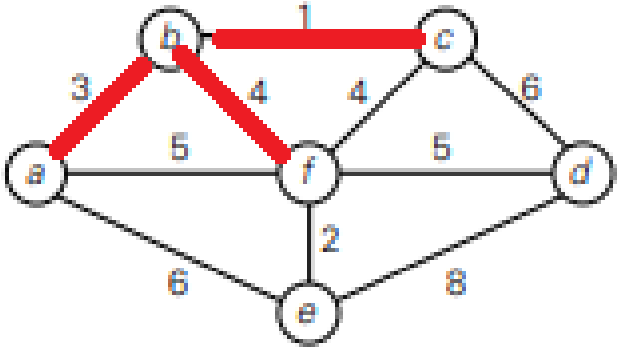

Algorithm execution

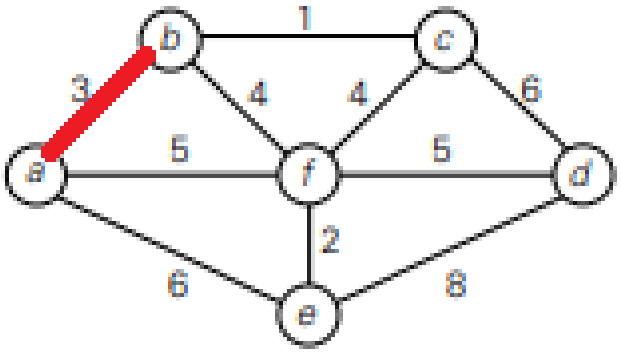

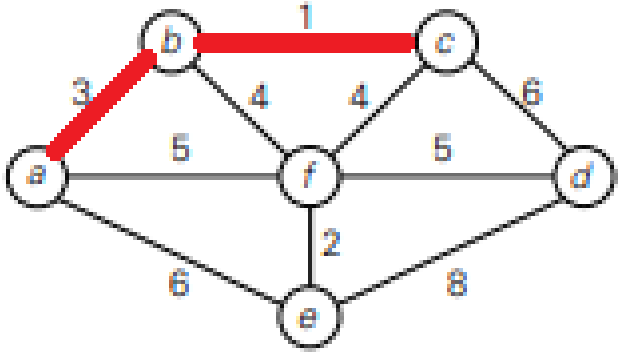

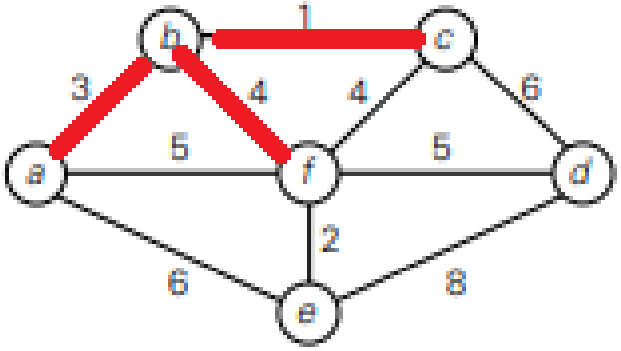

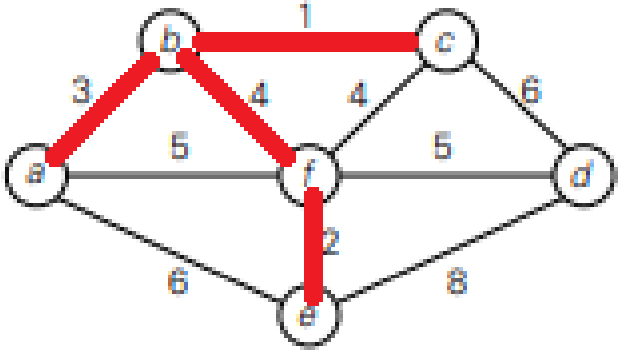

Algorithm execution

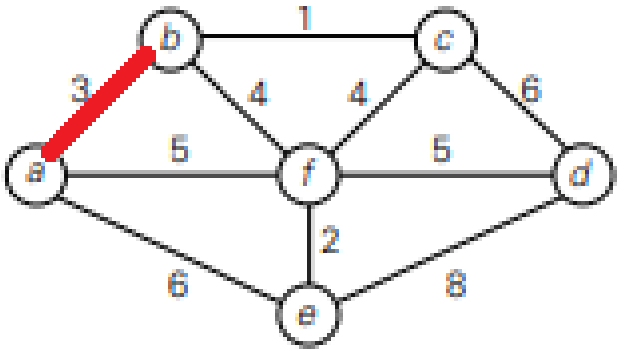

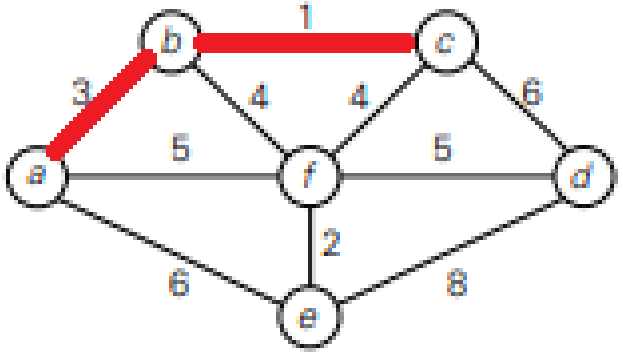

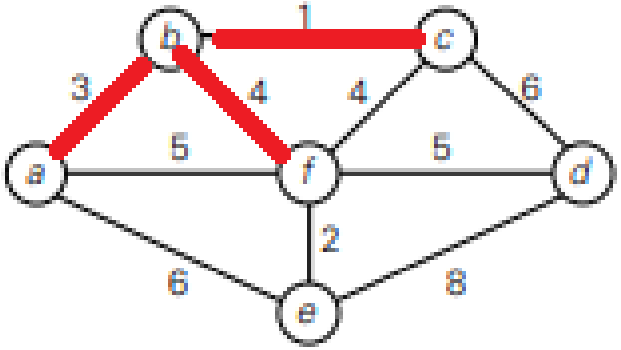

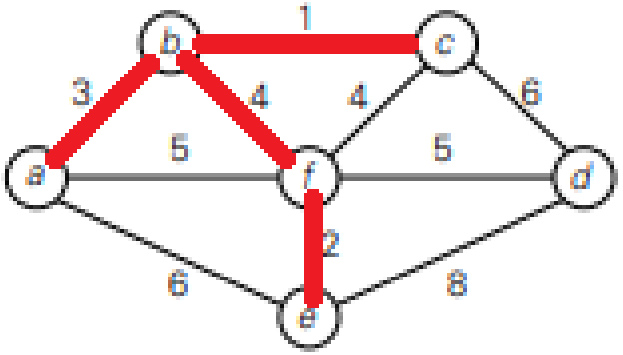

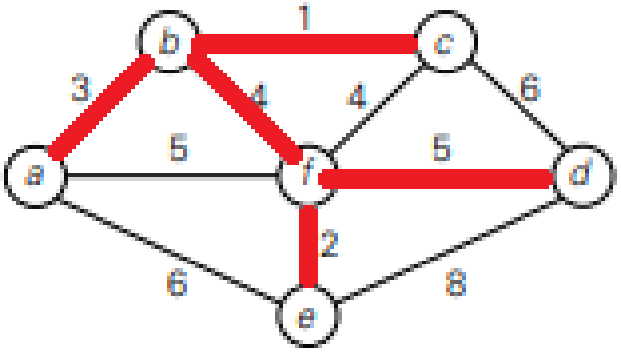

Algorithm

//Prim's algorithm for constructing a minimum spanning tree
//Input: A weighted connected graph $G = \langle V, E \rangle$
//Output: E_T, the set of edges composing a minimum spanning tree of G

ALGORITHM *Prim(G)*

$V_T \leftarrow \{v_0\}$ //the set of tree vertices can be initialized with any vertex
$E_T \leftarrow \varnothing$
for $i \leftarrow 1$ **to** $|V| - 1$ **do**
  find a minimum-weight edge $e^* = (v^*, u^*)$ among all the edges (v, u)
  such that v is in V_T and u is in $V - V_T$
  $V_T \leftarrow V_T \cup \{u^*\}$
  $E_T \leftarrow E_T \cup \{e^*\}$
return E_T

Exercise

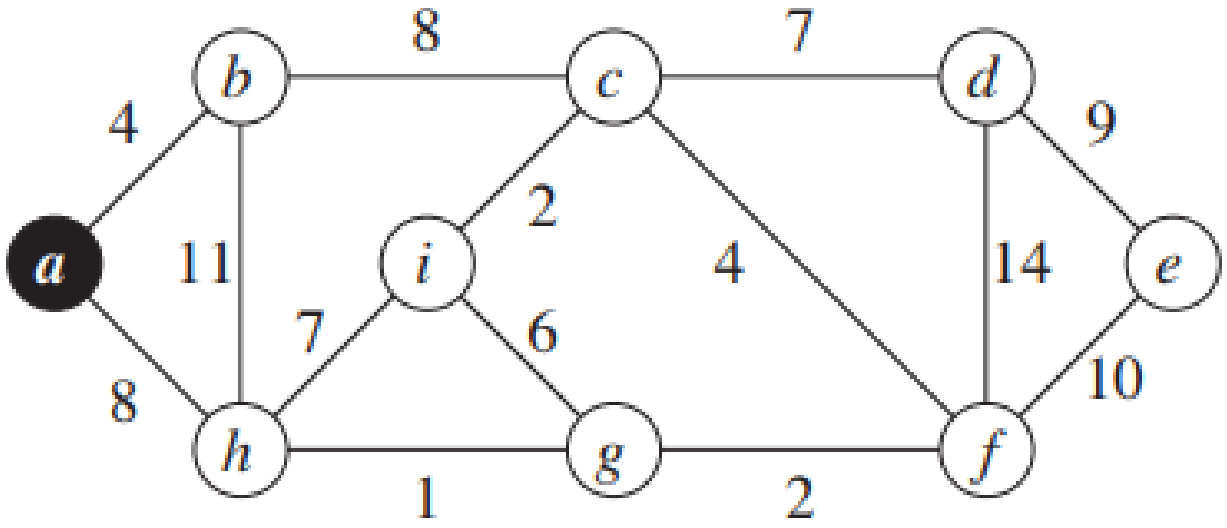

Exercise

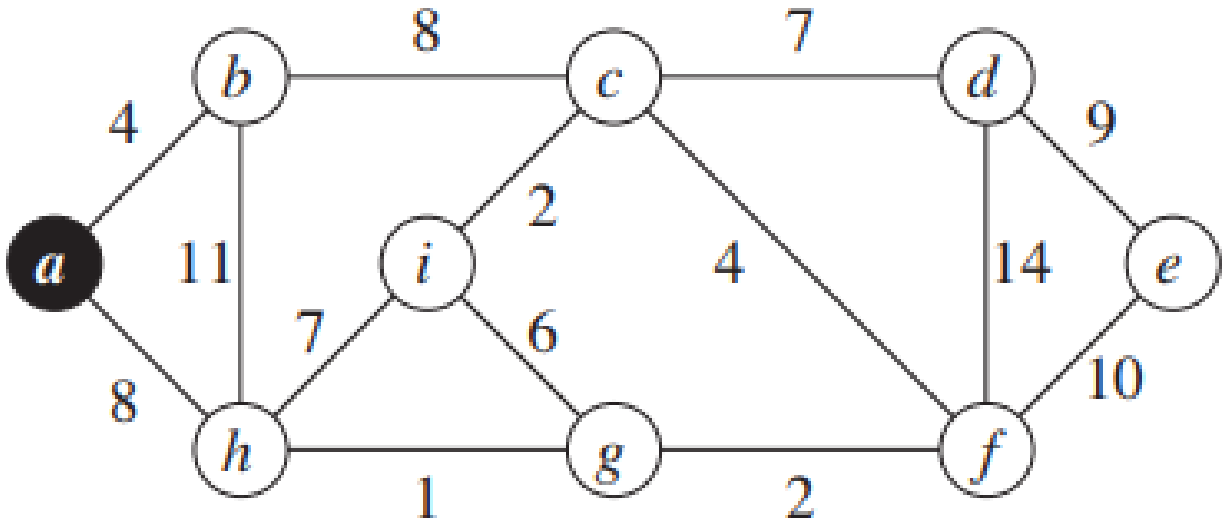

Minimum spanning tree edges:
$E_T = \{(a,b),(b,c),(c,i),(c,f),(g,f),(g,h),(c,d),(d,e)\}$
Weight of $T = 37$

Exercise

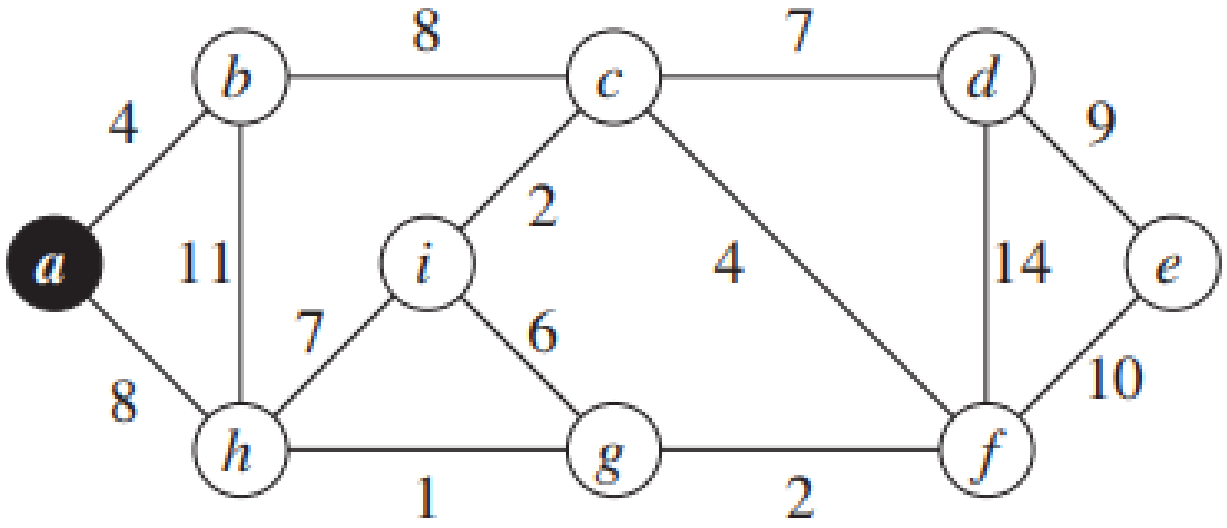

Minimum spanning tree edges:

$E_T = \{(a,b),(b,c),(c,i),(c,f),(g,f),(g,h),(c,d),(d,e)\}$

Weight of $T = 37$

Any other MST?

Time complexity

- Again depends on the implementation of min-priority queue.
- With a binary heap, we get a running time of $O(E \log V)$.
- With a fibonaci heap, the running time improves to $O(E + V \log V)$.

Summary

- Prim's algorithm uses greedy strategy to compute a minimum spanning tree for a given weighted, undirected graph.
- It greedily picks the edge with the minimum weight across a partially constructed spanning tree and the remaining edges in the graph.
- That is, it is a greedy algorithm that "grows" a minimum spanning tree through a greedy inclusion of the nearest vertex to the vertices already in the tree.
- The time complexity depends on the implementation of min-priority queue.